COMPONENTI ELETTRONICI

Via Adriatica 17/c 60022 Castelfidardo (AN)
tel.071721091 fax 0717210922
P.IVA 00207600420
email: info@adimpex.it

Esagonali maschio-femmina M3 in ottone nichelato

Codice Adimpex: **VD000010**

DISTANZ.OTTONE EX/5 3MA M/F-10

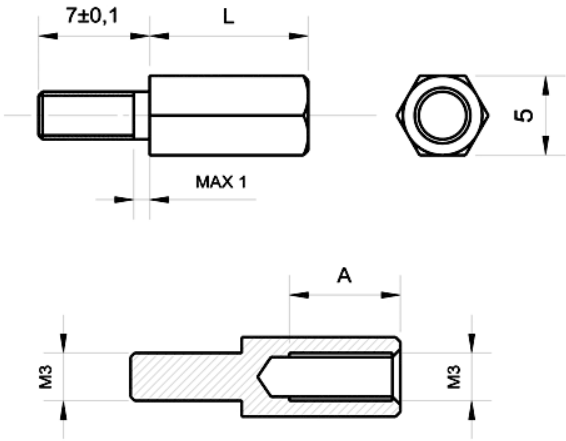

Codice Adimpex	L	A
VD000005	5.0	3.5
VD000006	6.0	5.0
VD000007	7.0	5.0
VD000008	8.0	6.0
VD000009	9.0	7.0
VD000010	10.0	7.0
VD000011	11.0	7.0
VD000012	12.0	7.0
VD000013	13.0	7.0
VD000014	14.0	7.0
VD000015	15.0	7.0
VD000016	16.0	7.0
VD000017	17.0	7.0

Codice Adimpex	L	A
VD000018	18.0	7.0
VD000020	20.0	7.0
VD000022	22.0	7.0
VD000023	23.0	7.0
VD000024	24.0	7.0
VD000025	25.0	7.0
VD000030	30.0	7.0
VD000032	32.0	7.0
VD000035	35.0	7.0
VD000040	40.0	7.0
VD000045	45.0	7.0
VD000050	50.0	7.0
VD000060	60.0	7.0